SUCOFLEX 400

Edition 2008

HUBER+SUHNER

Excellence in Connectivity Solutions

The loss revolution

Your partner for system solutions

HUBER+SUHNER is a leading international producer and supplier of electrical and optical interconnectivity components and systems. Core capabilities in radio frequency, fiber optic and low frequency technology are united under a single roof.

The success of the company's high-grade standard products and customised applications based on its cutting edge-know how in radio frequency and microwave technology, supported by advanced simulation processes.

HUBER+SUHNER

Excellence in Connectivity Solutions

SUCOFLEX 400, the insertion loss revolution

The new SUCOFLEX 400 microwave cable family has been specifically developed for applications on the ground for defence technology, medical and space measurement technology applications, where the lowest loss, highest performance, the best phase stability versus temperature and phase stability versus bending, excellent return loss and mechanical stability are of the utmost importance.

There will be a steady roll-out of SUCOFLEX 400 products for specific relevant markets starting with the SUCOFLEX 404 with straight male SMA connector, which is available now. The SUCOFLEX 406 including N and TNC straight male connectors will follow in February 2009. This cable will have the lowest loss of the family and thus be the lowest loss product up to 18 GHz on the market. During the course of 2009, the connector range will be expanded and followed by additional thinner versions with the lowest losses for frequencies up to 40 GHz, as well as additional jackets and armor for all kinds of applications.

Current HF systems for defence, medical and space applications must comply with the highest demands, so it is essential that the accompanying connection components meet the highest standards too. The new SUCOFLEX 400 family meets these demands.

SUCOFLEX 404 – Customer need

Features

- Applicable up to 26.5 GHz
- Lowest loss on the market up to 26.5 GHz
- Best phase stability vs. temperature and bending
- Excellent VSWR

Applications

Defence
Radar and electronic warfare, tactical and strategic communication

Space
Thermal vacuum tests for satellite components or entire satellites

Medical
RF ablation for cancer tumours, connections between RF generator and probe

SUCOFLEX 404 technical data

Cable Design

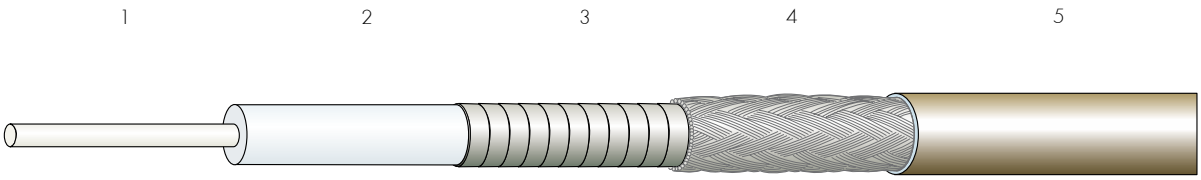

Construction

	Material	Diameter
1 Centre conductor	Silver-plated copper wire, solid	
2 Dielectric	Extruded ultra low density PTFE	
3 Inner shield	Silver-plated copper tape	
4 Outer shield	Silver-plated copper braid	
5 Jacket	Fluorinated Ethylene Propylene (FEP)	5.5 mm (0.216 inch)

Electrical characteristics

Impedance	50 ± 1 Ω
Operating frequency	26.5 GHz
Capacitance	74.8 pF/m (22.8 pF/ft)
Velocity of propagation	89%
Signal delay	3.74 ns/m (1.14 ns/ft)
Nominal phase	1'347°/GHz/m (410.5°/GHz/ft)
Phase stability vs. temperature	See graph 3+4
Phase stability vs. bending, 2 x 360°, radius 50 mm	< ± 0.40° / GHz
Insertion loss stability vs, temperature	< 0.0023 /°C
Insertion loss stability vs. bending	< 0.05 dB
Screening effectiveness up to 18 GHz	> 90 dB
Attenuation	See graph 1
Power handling	See graph 2
Return loss with straight SMA connectors	Min. 20.0 dB up to 18.0 GHz

Mechanical characteristics

Weight	< 72 g/m
Min. bending radius	25 mm
Crush resistance	200 N / 100 mm

Environmental characteristics

Operating temperature range	-55° to +125°C
Moisture resistance	MIL-STD-202, Method 106
Humidity	MIL-STD-810, Method 507.2, Procedure II (Type of cycle: hot himid (cycle 4), number of cycles: 15)
IP rating	IP 68
Salt fog	MIL-STD-810, Method 509.2, (48 hours, exposure to a 5% solution)
Sand and Dust	Def. Stand. 07-55, Part 2, section 4, issue 1 (+35°C, 3 hours)
Smoke index	Naval engineering Standard 711 and ASTM-B 622-92 (140°F for 24 hors, conditioned at 73°F and 50% relative humidity)
Solar radiation	MIL-STD-810, Method 505, Procedure II
Flammability	MIL-C-87104, Paragraph 4.6.4.8
Fungus	MIL-STD-810, Method 508.3
Chemical resistance	British Standard 3G100, Part 2, Section 3, Class A
Halogen free product	No
RoHS (2002/95/EC)	Compliant

Available connector 11_SMA-401

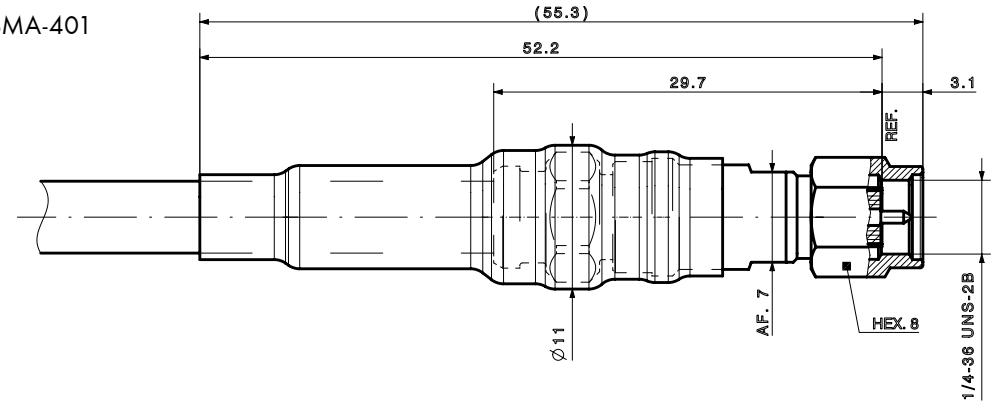

SUCOFLEX 404 technical data

Graph 1: Cable attenuation (25 °C ambient temperature)

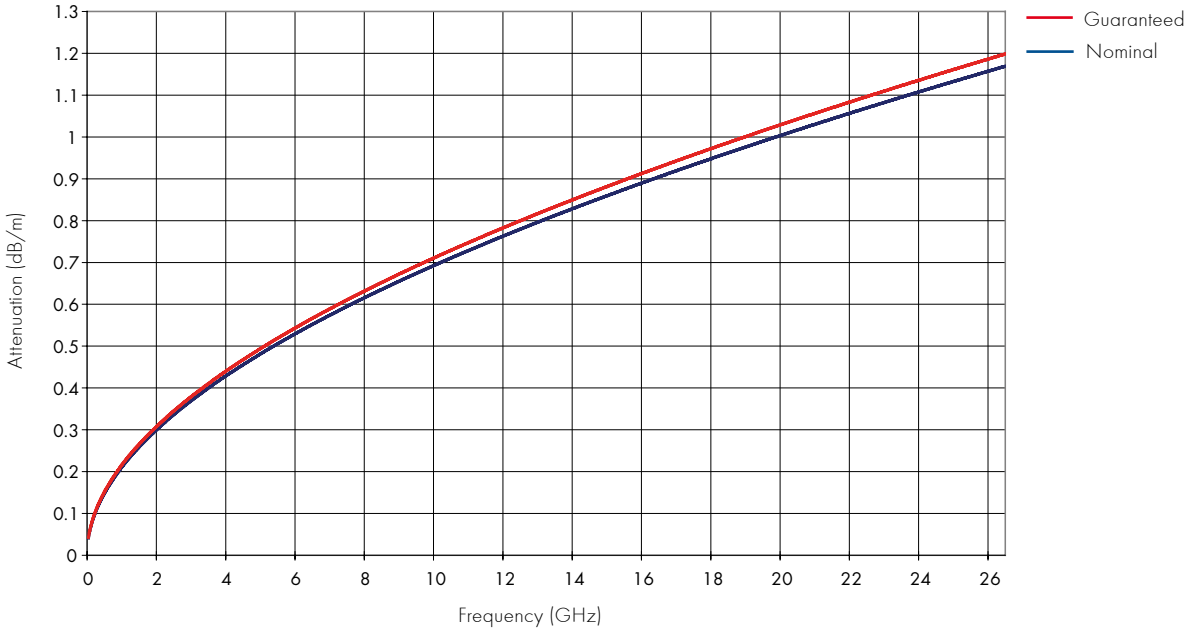

Graph 2: Max. power handling (40 °C ambient temperature and sea level)

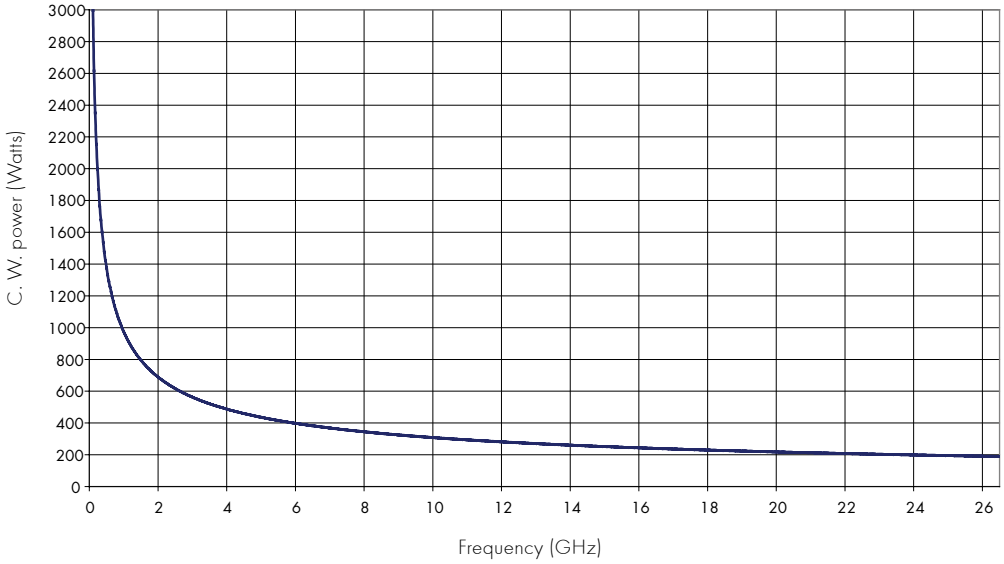

SUCOFLEX 404 technical data

Graph 3: Phase stability vs. temperature in degree (°)

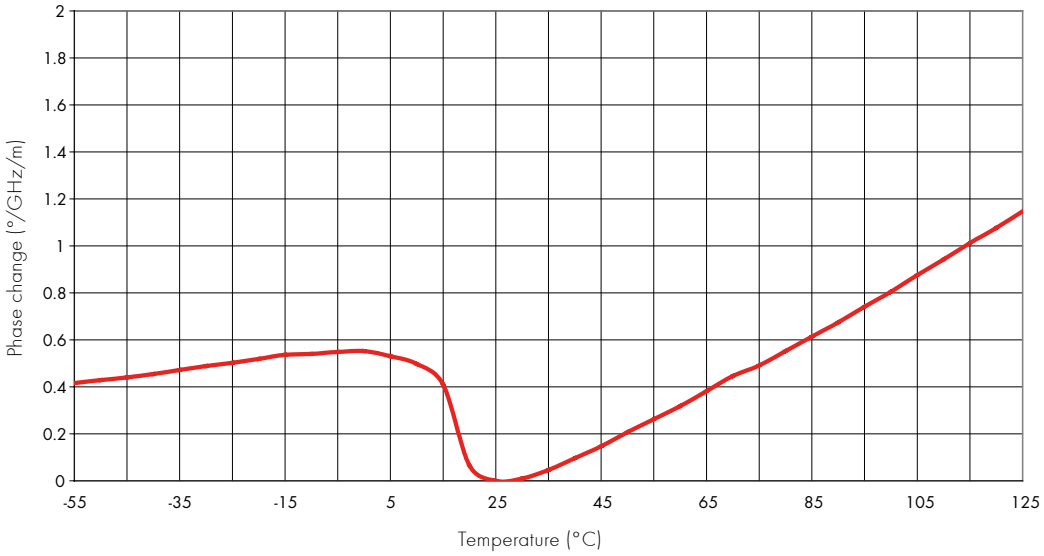

Graph 4: Phase stability vs. temperature in ppm

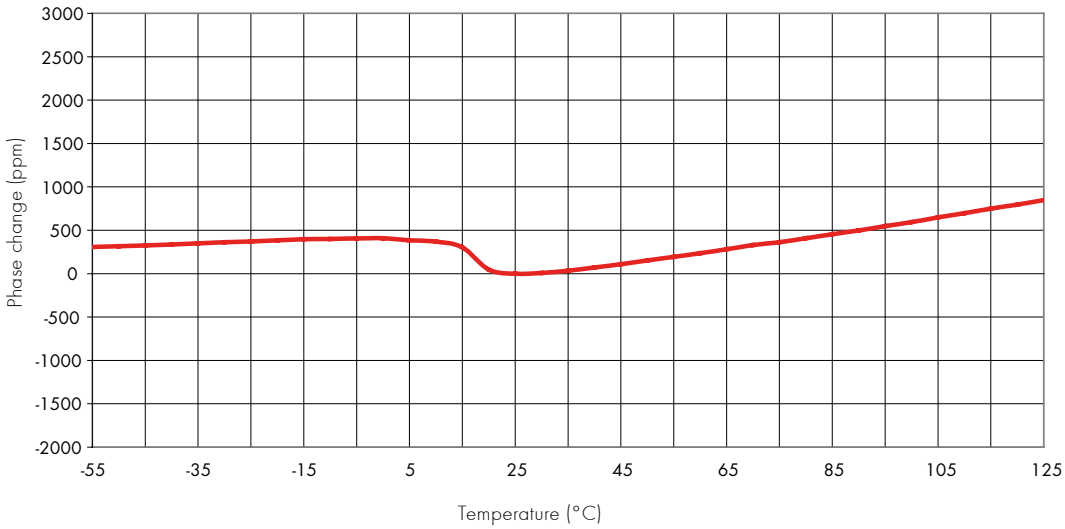

HUBER+SUHNER is certified according to ISO 9001 and ISO 14001.

WAIVER
It is exclusively in written agreements that we provide our customers with warrants and representations as to the technical specifications and/or the fitness for any particular purpose. The facts and figures contained herein are carefully compiled to the best of our knowledge, but they are intended for general informational purposes only.

HUBER+SUHNER AG
RF Industrial
Degersheimerstrasse 14
9100 Herisau/Switzerland
Tel. +41 71 353 4111
Fax +41 71 353 4647
info@hubersuhner.com

84068670/09.2008

hubersuhner.com